UKICERI
UK INDIA CLEAN ENERGY RESEARCH INSTITUTE

JUICE
Joint UK-India Clean Energy Centre

EPSRC
Pioneering research and skills

सत्यमेव जयते

विज्ञान एवं प्रौद्योगिकी विभाग
DEPARTMENT OF
SCIENCE & TECHNOLOGY

All about UKICERI

UK-India Clean Energy Research Institute (UKICERI) and Joint UK India Clean Energy Centre (JUICE) form a consortium involving a group of Indian and UK universities/institutes and industries. The aim is to provide competitive solutions for various issues related to promotion and use of renewable energy sources, especially solar PV systems. The consortium will strive to achieve holistic development in solar PV technology (both for on-and off-grid systems) and also investigate its impact on griddynamics and provide solutions through research innovations and technology demonstrations. The Indian and UK teams are led by IIT Kharagpur and Loughborough University respectively. The consortium is fully supported by DST, India and EPSRC, UK.

For more details visit : www.ukiceri.com , www.juice-centre.org.uk

Indian Partners

IIT Kharagpur

IISc

IIT Delhi

IIT Kanpur

IIT Madras

IIT Bhubaneswar

IIEST Shibpur

MNIT Jaipur

UK Partners

Loughborough University

Imperial College London

WARWICK
THE UNIVERSITY OF WARWICK

UNIVERSITY OF BIRMINGHAM

UNIVERSITY OF Southampton

MANCHESTER 1824
The University of Manchester

CARDIFF UNIVERSITY
PRIFYSGOL CAERDYDD

UNIVERSITY OF EXETER

UNIVERSITY OF OXFORD

Swansea University
Prifysgol Abertawe

Vision

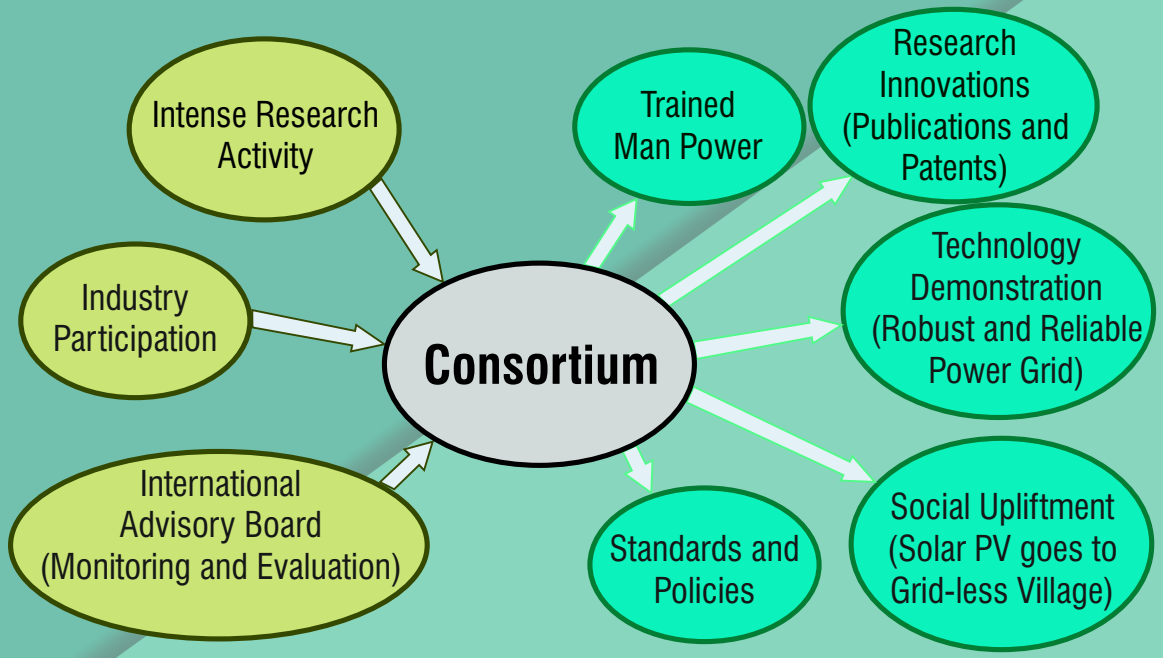

Consortium targets a greener world: Innovations and system demonstrations are the key

WP 1.1 Stability issues

The increasing penetration of solar PV into the grid introduces system stability issues as the interfacing inverters do not have inherent grid support characteristics.

The objectives of this work package include modeling of solar PV for stability studies, impact assessment of increased PV penetration and control design to facilitate the increased PV penetration.

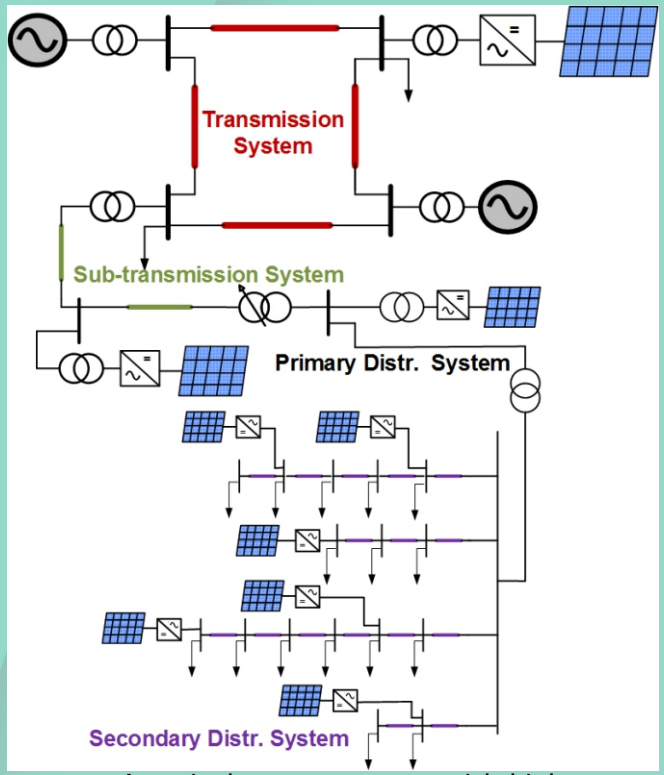

A typical power system with high penetration of solar PV

Team : Dr. Saikat Chakrabarti (IIT Kanpur)
UK side collaborator : Prof. Bikash Pal (Imperial College London)

WP 1.2 Forecasting and risk minimization

Objective of this work package are
Develop tools and methodologies for :

- Building forecasting models for solar irradiance at solar generator locations using past weather data
- Evaluating grid impact of solar generation with power electronic converters in load servicing, and with capacitive storage for reactive power supply in case of voltage collapse
- Analysis of effective load carrying capacity of a mini-grid in the presence of solar generators and storage, to facilitate optimal planning, operation, and designing efficient power market mechanisms

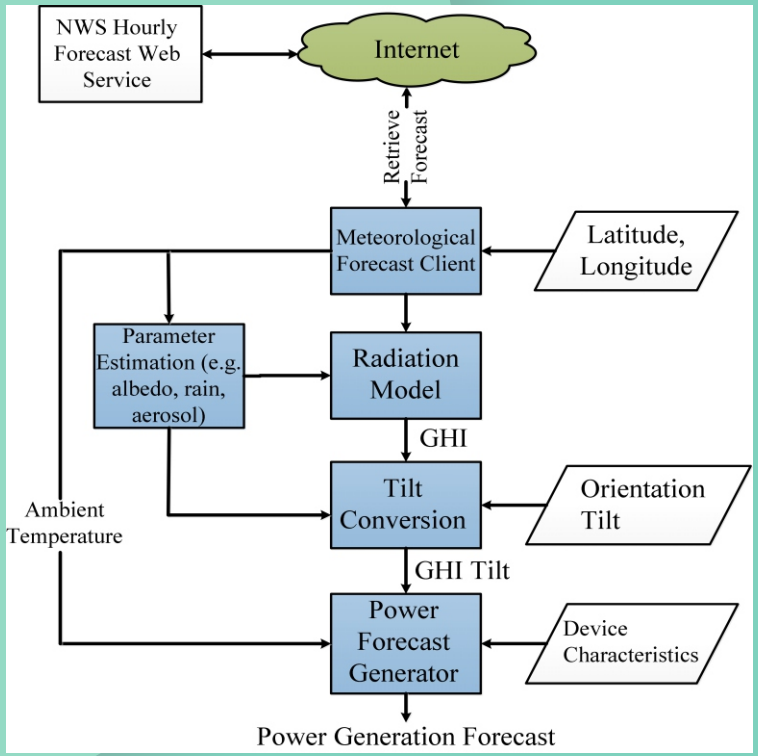

Team : Prof. Sandeep Shukla (IIT Kanpur)
Prof. Pallab Das Gupta (IIT Kharagpur)
UK side collaborator : Dr. Diane Palmer (Loughborough University)

WP 1.3 Network protection

Development of new protection schemes using PMUs and relays for a network fed with high amount of renewables.

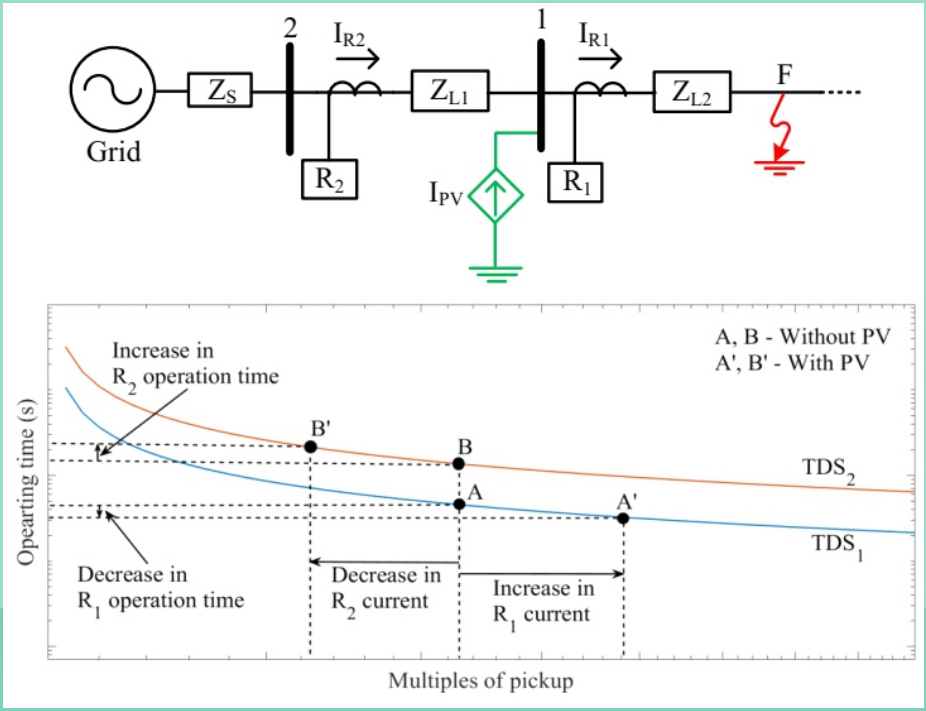

Team : Prof. A.K. Pradhan (IIT Kharagpur)
UK side collaborator : Prof. Bikash Pal (Imperial College London)

WP 1.4 Communication supervised control

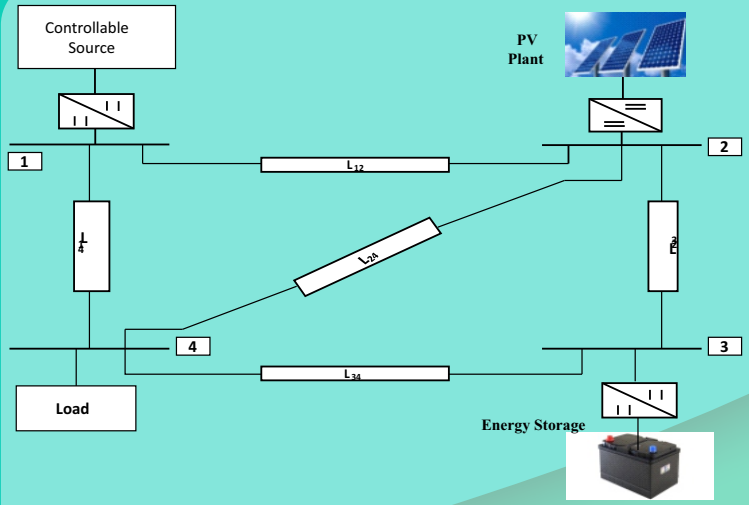

Four bus interconnected DC microgrid

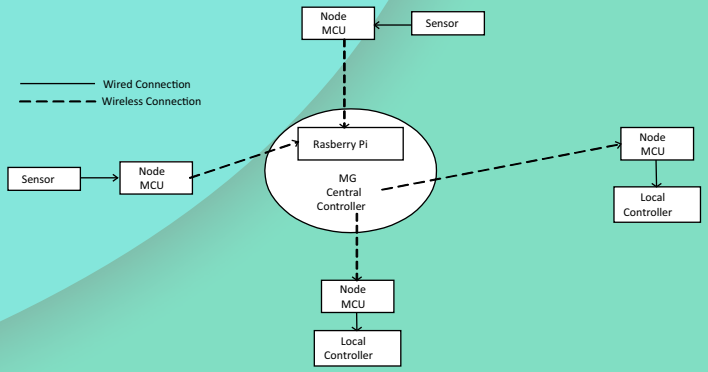

Communication schematic for supervisory tertiary control

In an interconnected DC microgrid, power injections and absorptions at different buses can cause significant voltage deviations at load terminals. Even though droop control at the primary level aids in sharing of load among the converters, it introduces load dependent voltage drop in the system. To overcome this, voltage restoration can be provided at the voltage controlled buses. However, secondary voltage control at different buses cannot ensure voltage quality at critical load buses. This work proposes a tertiary load voltage control utilizing the coordination among different voltage controlled buses to set their references such that the load voltage deviation is minimized.

Team : Prof. Sukumar Mishra, Prof. Ranjan K. Mallik (IIT Delhi)
UK side collaborator : Prof. Jianzhong Wu (Cardiff University)

WP 1.5 Fault tolerant operation

Fault-tolerant operation of microgrid aims at utilizing the energy storage devices for grid supporting activity like voltage fault ride through. Islanding detection algorithm and control strategy for efficient operation of the islanded microgrid are the subsequent objectives

Team : Dr. Prabodh Bajpai (IIT Kharagpur),
Dr. Kalyan Kumar B (IIT Madras)
UK side collaborator : Prof. Jianzhong Wu, (Cardiff University),
Prof. A.J.Cruden, (University of Southampton)

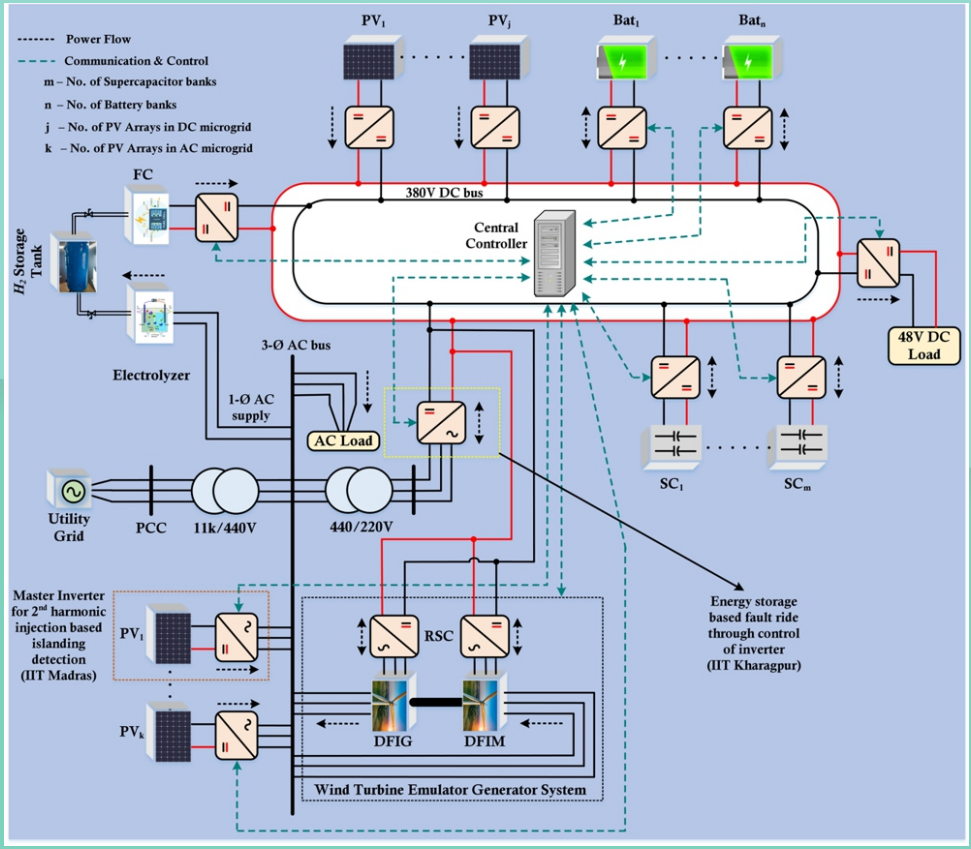

Fault tolerant operation of microgrid

WP 2.1 Micro inverters

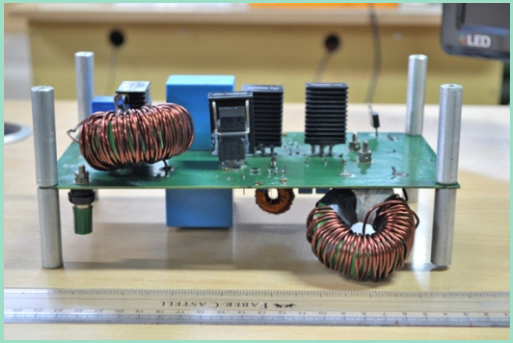

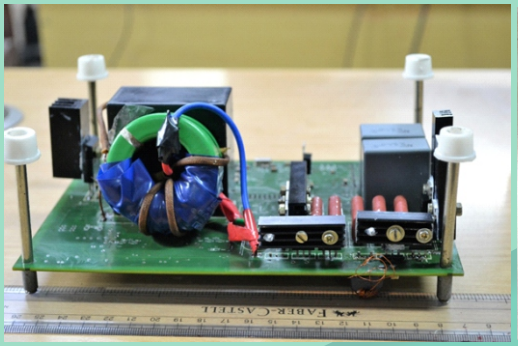

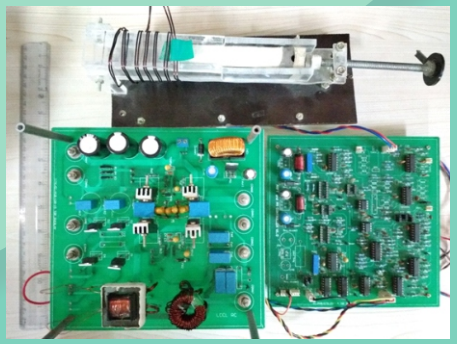

Investigating 3 different micro-inverter configurations

- Single-stage : Developed a 400 W prototype, suitable for 110 V grid;
  - Both Cuk and SEPIC derived circuits developed
  - DC-DC and DC-AC stages incorporated
  - Both uni-modal and bi-modal control analytically & experimentally proven
- Two-stage, Flyback: Developed the dc-dc stage of a 400 W prototype for 220 V grid
  - Leakage energy recycled, hence high efficiency
  - Analytically and experimentally proven
- Two-stage, LLC resonant: Developed the dc-dc stage of a 200 W prototype, for 220 V grid.
  - Automatic resonant frequency tuning developed & tested to ensure maximal gain and efficiency

Team : Prof. Partha S. Sensarma (IIT Kanpur)
UK side collaborator : Prof. Tim Green(Imperial College London)

WP 2.2 String inverters

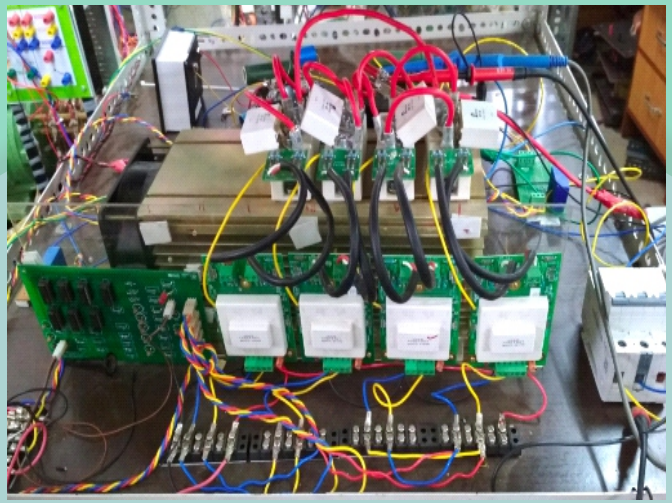

Experimental prototype of H-MMC

Study of the characteristics of wide band-gap devices, reliability studies and formulation of efficient MPPT algorithms for partial shading related to string-inverters is being currently targeted.

Team : Prof. Chandan Chakraborty, Dr. Suman Maiti (IIT Kharagpur)
UK side collaborator : Prof. Tim Green (Imperial College London)

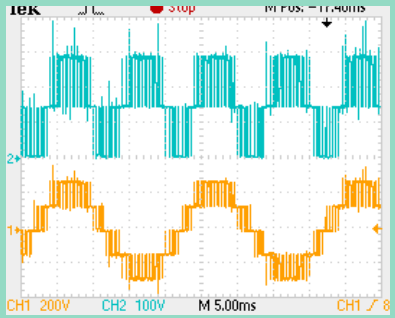

Ch-1, Output voltage of H-MMC (200 V/div) before inductor, Ch-2: DC-link voltage of H-MMC (100 V/div),

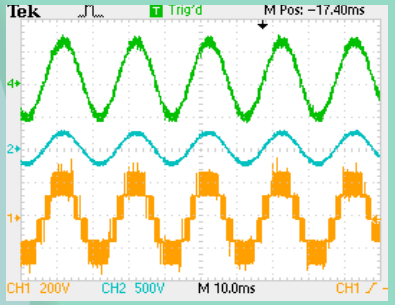

Ch-1: Output voltage of H-MMC (200 V/div), Ch-2: grid voltage (500 V/div), Ch-4: phase current (5A/div) of the converter

WP 2.3 Central inverters

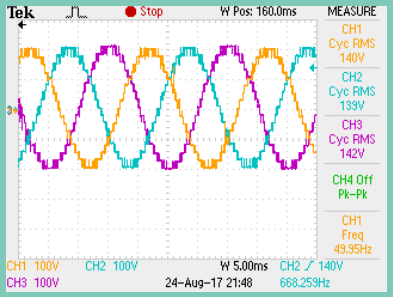

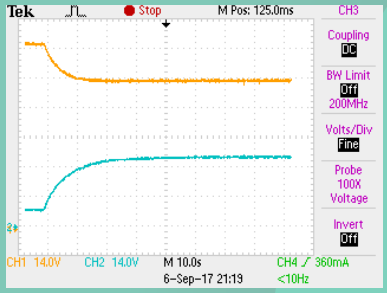

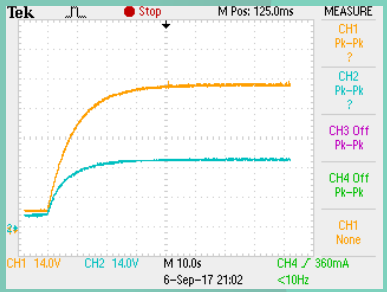

A level doubling network based topology is developed for central inverter applications. The inverter works has a single DC source for all the three phases. The dc link is fed from Solar PV array for variable irradiance. Irrespective of the irradiance, the inverter produces a sinusoidal output voltage.

Prototype of high-resolution level doubling network based multi-level inverter

Team : Dr. Suman Maiti, Prof. Chandan Chakraborty (IIT Kharagpur)
UK side collaborator : Prof. Tim Green (Imperial College London)

WP 3 Low voltage AC grid

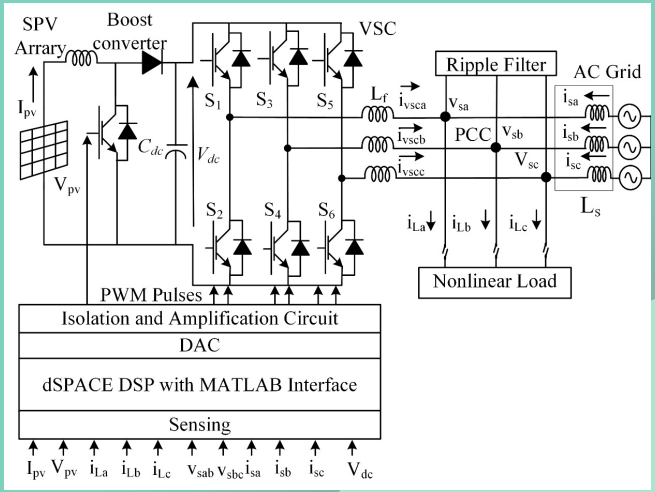

System configuration

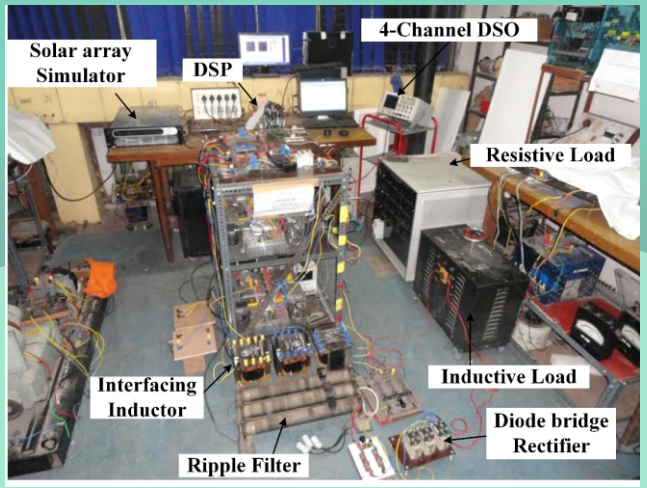

Hardware setup

Control approach and circuit design of single-phase and three-phase ON/OFF-grid inverter based solar-energy conversion system (SECS) are currently being explored considering power quality issues such as harmonics, reactive power balance, load unbalance etc. Also, the performance of the SECS under practical scenarios like severe voltage fluctuations, voltage harmonics will be tested.

Team : Prof. Bhim Singh, Dr. Abhijit Abhayankar (IIT Delhi)
UK side collaborator : Dr. Richard Lewis (University of Swansea)

WP 4 Energy storage integration

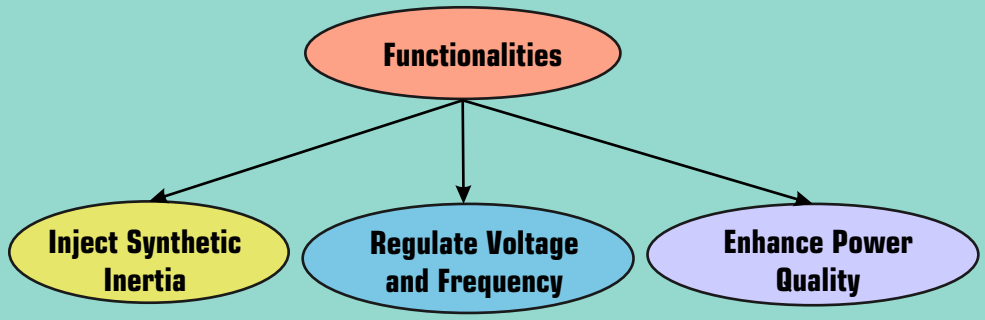

Investigation on use of cost-effective and different time scale storage to emulate inertia in weak grid is currently under progress. Batteries, ultra-capacitors and pumped energy storage are the different time-scale energy storage systems which are being considered for improvement of frequency dynamics. Also, different converter topologies for implementing charging/discharging controller is being targeted.

Experimental setup for battery energy storage system

Team : Prof. Chandan Chakraborty, Prof. Sudipto Ghosh,Dr. Suman Maiti (IIT Kharagpur)
Dr. Srinivas B. Karanki (IIT Bhubaneswar)

UK side collaborator : Prof. Bikash Pal, Dr Billy Wu (Imperial College London), Prof. Jihong Wang (University of Warwick), Dr Helena Navarro (University of Birmingham)

WP 5 System modeling & optimization

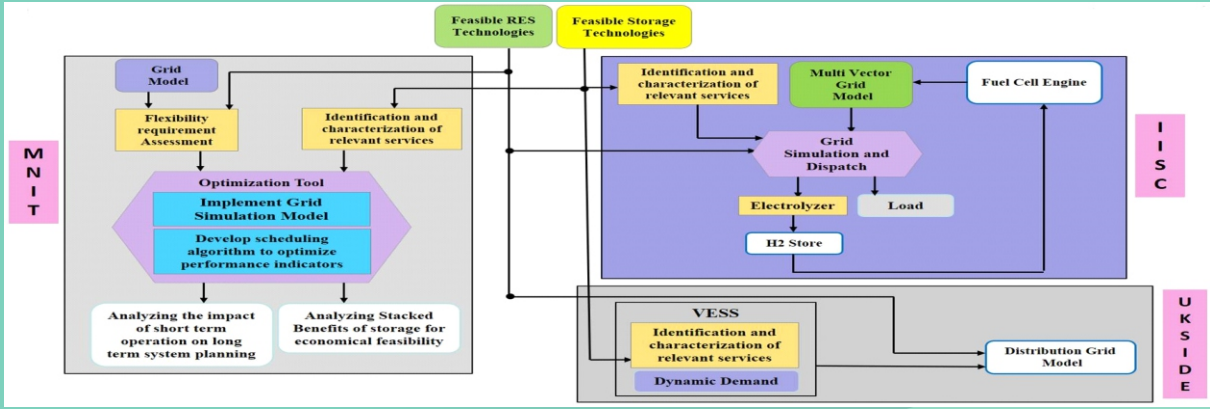

Block diagram of working methodology under WP-5

The objective of this work are: (i) Development of methodology to capture multiple value streams of storage, for improving flexibility in off-grid and grid integrated systems and (ii) Analyzing the impact of high solar penetration in the system through integrated short-term and long-term modelling approaches considering energy storage

Team : Prof. Jyotirmay Mathur,Dr.Rohit Bhakar,Dr. Sanjay Mathur,Dr. Amartya Choudhury (MNIT Jaipur) ,Prof. Pradip Dutta,Prof. S. Srinivasa Murthy (IISc Bangalore)

UK side collaborator : Prof. Jianzhong Wu (Cardiff University)
Prof. Goran Strbac (Imperial College London)

WP 6 Ultracapacitor assisted microgrid

- To be able to interface to hierarchical microgrids and other grids thereon.
- To make scalable sensor networks that are self-sustaining, autonomous, re-usable and invisible.
- Analyse sensed data and make demand-response recommendations.

The deliverables of this project are:

- Voltage and current controlled GTIs with power sharing during autonomous operation. Modeling, simulation and development
- Ultra-capacitor based storage for interface with inverter dc-link
- Development of load management units (LMUs) in moving towards power router
- Phase router which performs seamless transfer of a load from one phase to another so as to balance loads across the phases
- Energy harvested current and voltage sensing, neutral-less power switch and joule jotter as energy sensor and logger

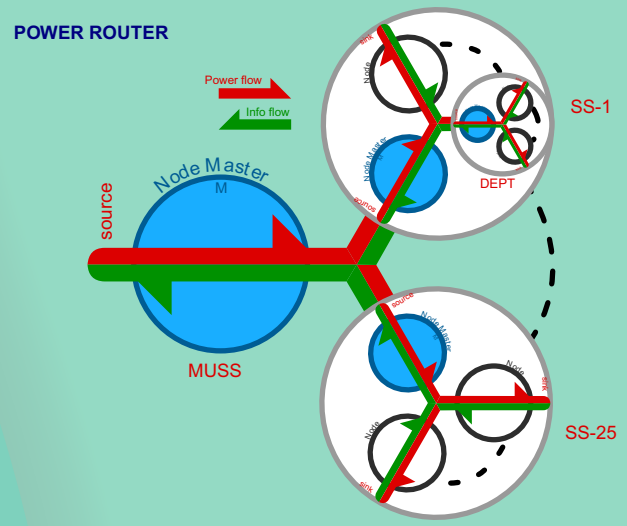

Team : L.Umanand (Lead), Joy Kuri, T.V.Prabhakar, Haresh Dagale (IISc)
Chandan Chakraborty, Suman Maiti (IIT Kharagpur)
UK side collaborator : Dr Murray Thomson (Loughbourgh University)

WP 7 Solar PV systems - solar module variability

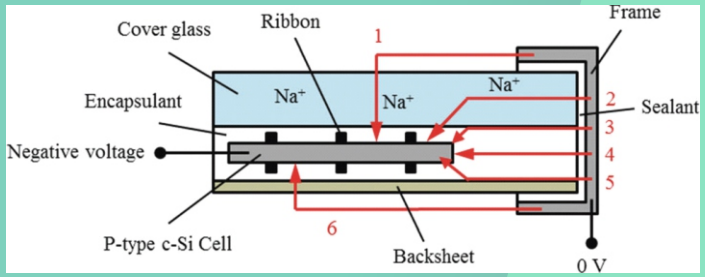

Leakage path causing PID

Main aim of the work is to study the performance of SPV systems of different technologies under different environmental conditions, analyze the estimated v/s actual generation and also to understand Potential Induced Degradation(PID) behaviour in solar cells and modules of various technologies.

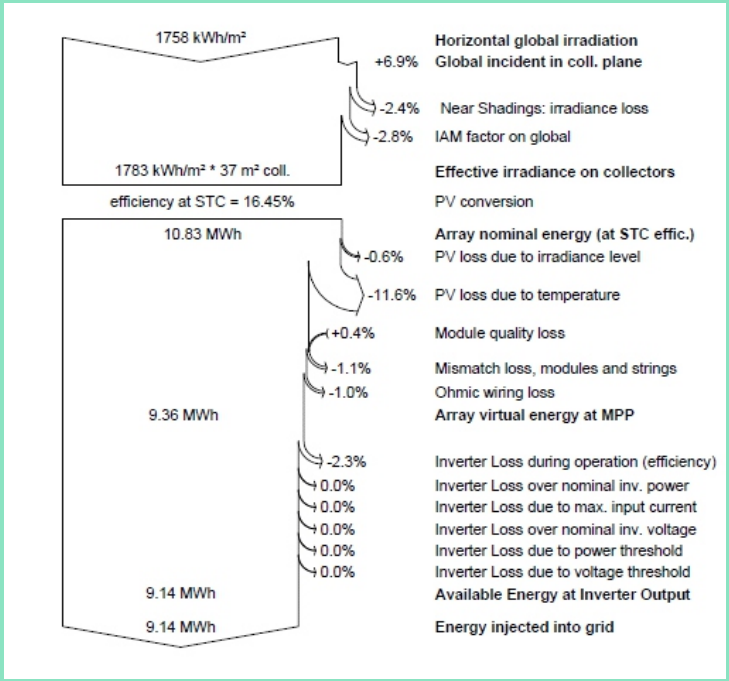

Loss diagram as obtained using PVsyst software

Team : Prof J N Roy,Dr. P Bajpai, (IIT Kharagpur),
Prof H Saha (IIEST Shibpur)

UK side collaborator : Prof. David Worsley ,Dr Trystan Watson (Swansea University)
Prof. Jenny Nelson(Imperial College London)
Prof. Tapas Mallick (University of Exeter)

WP 8 Balance of system

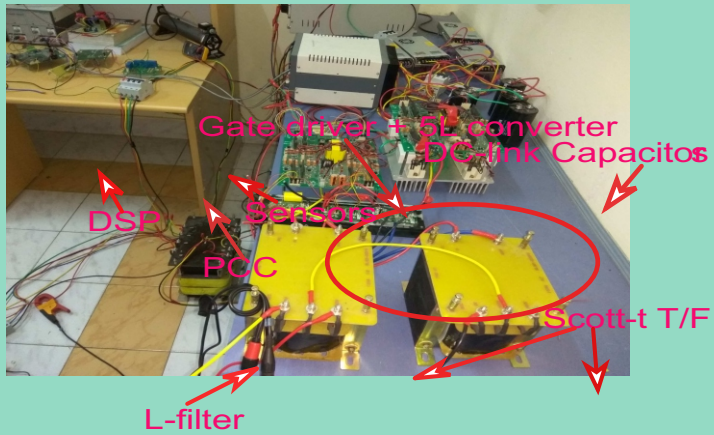

5-level Multilevel GTI using Scott-T isolation prototype
(under development)

The objectives of this project are:

- To build modular and scalable solar PV grid tied inverters (GTIs).
- To monitor and log data from a PV dominant microgrid.
- Analyse logged data and make grid maintenance recommendations

Team : Prof S Reddy and Prof L Umanand (IISc Bangalore) Prof J N Roy, Prof C Chakraborty (IIT Kharagpur),Prof H Saha (IIEST Shibpur)

UK side collaborator : Dr John Barton, Dr Murray Thompson (Loughborough University)

Key patents

- Rajesh V, S.K. Chattopadhyay and C. Chakraborty "A single dc source driven asymmetric multilevel inverter" Indian Patent Application No.: 201831003729, 31 Jan. 2018.
- Bhim Singh, Bijaya Ketan Panigrahi, Nishant Kumar and Ikhlaq Hussain, “Oscillation Free and Rapid Maximum Power Extraction from PV Panel using Voltage Sensorless Model Predictive Adaptive Control,” (Indian Patent Application No.:201811017012).
- S.K. Chattopadhyay and C. Chakraborty "Hybrid asymmetrical multilevel inverter" Indian Patent Application No.: 201731046611.
- S.K. Chattopadhyay and C. Chakraborty "Fault Tolerant Voltage Source Converter System with Open Loop Control of Wave-Shapers" Indian Patent Application No.: 201731018873.
- Bhim Singh, Bijaya Ketan Panigrahi, Nishant Kumar and Ikhlaq Hussain, “Fifth-Order Generalized Integrator with Reduced Sensor Topology for Robust Estimation of Fundamental Parameters from Grid Voltage and Control of 3-phase 2-stage Grid Integrated Solar PV Energy Conversion System,” (Indian Patent Application No.: 201711037832).

Key publications

- A. Kumar and P. Sensarma, "New Switching Strategy for Single-Mode Operation of a Single-Stage Buck-Boost Inverter," IEEE Transactions on Power Electronics, vol. 33, no. 7, pp. 5927-5936, July 2018.
- S. Tomar and S. Mishra, "CMPVI based MIDO Scheme under SSE for Optimum Energy Balance and Reduced ROI," IEEE Transactions on Sustainable Energy, vol. 9, no. 3, July 2018.
- N. Kumar, I. Hussain, B. Singh and B. Panigrahi, “Normal Harmonic Search Algorithm Based MPPT for Solar PV System and Integrated with Grid using Reduced Sensor Approach and PNKLMS Algorithm,” IEEE Transactions on Industry Applications, Jun. 2018.
- Satish Naik B, L Umanand, Gopakumar.K, Subba Reddy B, "A New Two Phase Five-Level Converter for Three Phase Isolated Grid-Tied Systems with Inherent Capacitor Balancing and Reduced Component Count", IEEE Journal of Emerging and Selected Topics in Power Electronics, Feb. 2018
- R. K. Sharma and S. Mishra, "Dynamic Power Management and Control of a PV PEM Fuel-Cell-Based Standalone ac/dc Microgrid Using Hybrid Energy Storage," IEEE Transactions on Industry Applications, vol. 54, no. 1, pp. 526-538, Jan.-Feb. 2018
- Satish Naik B, Shan S, L Umanand and Subba Reddy B, "A Novel Wide Duty Cycle Range Wide Band High Frequency Isolated Gate Driver for Power Converters", IEEE Transactions on Industry Applications , Vol.54, No.1, Jan/Feb 2018, pp 437-446.
- G. Ahmad, S. Mandal, A. K. Barua, T. K. Bhattacharyya and J. N. Roy, "Reduction of Hole Injection Barrier Height at TCO/P Interface Using a-SiO:H Interlayer," IEEE Journal of Photovoltaics, vol. 8, no. 1, pp. 8-15, Jan. 2018.
- T. Sarkar, A. K. Dan, S. Ghosh, K. Das Bhattacharya and H. Saha, "Interfacing solar PV power plant with rural distribution grid: challenges and possible solutions", International Journal of Sustainable Energy, Dec. 2017.

Key publications

- S. K. Chattopadhyay and C. Chakraborty, "A New Asymmetric Multilevel Inverter Topology Suitable for Solar PV Applications With Varying Irradiance," IEEE Transactions on Sustainable Energy, vol. 8, no. 4, pp. 1496-1506, Oct. 2017.
- V. Gautam and P. Sensarma, "Design of Cuk-Derived Transformerless Common-Grounded PV Microinverter in CCM," IEEE Transactions on Industrial Electronics, vol. 64, no. 8, pp. 6245-6254, Aug. 2017.
- A. Kumar and P. Sensarma, "A Four-Switch Single-Stage Single-Phase Buck-Boost Inverter," IEEE Transactions on Power Electronics, vol. 32, no. 7, pp. 5282-5292, Jul. 2017.
- S. K. Chattopadhyay and C. Chakraborty, "Three-Phase Cascaded Multilevel Inverter Using Topological Modules with 1:7 Ratio of Asymmetry," IEEE Journal of Emerging and Selected Topics in Power Electronics (in early access).
- U. Kundu and P. Sensarma, "Accurate Estimation of Diode Reverse-recovery Characteristics from Datasheet Specifications," IEEE Transactions on Power Electronics (accepted for publication)
- V. Gautam and P. Sensarma, "Enhancing the Voltage Gain of a Flyback Converter Using Leakage Energy," IEEE Transactions on Industry Applications.(accepted for publication)
- A. Jamaita, V. Gautam and P. Sensarma, "Power Decoupling for Single Phase PV System using Cuk derived micro-inverter," IEEE Transactions on Industry Applications.(accepted for publication)
- Satish Naik B, L Umanand, Gopakumar.K, Subba Reddy B, "A Two Phase Five Level Converter with Least Number of Power Switches Requiring only a Single DC Source", IEEE Journal of Emerging and Selected Topics in Power Electronics (in early access)
- S. Mudaliyar and S. Mishra, "Coordinated Voltage Control of a Grid Connected Ring DC Microgrid with Energy Hub," IEEE Transactions on Smart Grid (in early access)

Team members

Prof. A K Pradhan
Department of Electrical Engineering,
IIT Kharagpur

Prof. Chandan Chakraborty
(Lead : India)
Department of Electrical Engineering, IIT Kharagpur

Prof. Joy Kuri
Department of Electronic Systems Engineering,
IISc Bangalore.

Prof. Partha S. Sensarma
Department of Electrical Engineering,
IIT Kanpur

Prof. Ranjan K. Mallik
Department of Electrical Engineering,
IIT Delhi

Prof. Sandeep Shukla
Department of Computer Science and Engineering,
IIT Kanpur

Prof. Subba Reddy B
Principal Research Scientist
IISc, Bangalore

Prof. Bhim Singh
Department of Electrical Engineering,
IIT Delhi

Prof. Hiranmay Saha
Centre of Excellence for Green Energy and Sensor Systems,
IIEST Shibpur

Prof. Jyotirmay Mathur
Department of Mechanical Engineering and Centre for Energy and Environment
MNIT, Jaipur

Prof. Prabodh Bajpai
Department of Electrical Engineering,
IIT Kharagpur

Prof Rohit Bhakar
Department of Electrical Engineering,
MNIT Jaipur

Prof. Srinivas Bhaskar Karanki
School of Electrical Sciences,
IIT Bhubaneswar

Prof. Sukumar Mishra
Department of Electrical Engineering
IIT Delhi

Prof. B. Kalyan Kumar
Department of Electrical Engineering,
IIT Madras

Prof. Jatindra Nath Roy
Advanced Technology Development Centre and School of Energy Science & Engineering,
IIT Kharagpur

Prof. L. Umanand
Department of Electronic Systems Engineering,
IISc Bangalore

Prof. Pradip Dutta
Department of Mechanical Engineering,
IISc Bangalore

Prof. Saikat Chakrabarti
Department of Electrical Engineering,
IIT Kanpur

Prof. S. Srinivasa Murthy
Interdisciplinary Center for Energy Research,
IISc Bangalore

Prof. Suman Maiti
Department of Electrical Engineering,
IIT Kharagpur

Contact (India)

Dr Chandan Chakraborty
Dept. of Electrical Engineering
Indian Institute of Technology Kharagpur
email : cc.iitkgp.project@gmail.com

Contact (UK)

Dr Murray Thomson
Centre for Renewable Energy Systems Technology
Loughbourgh University
email : m.thomson@lboro.ac.uk

For more details visit : www.ukiceri.com , www.juice-centre.org.uk